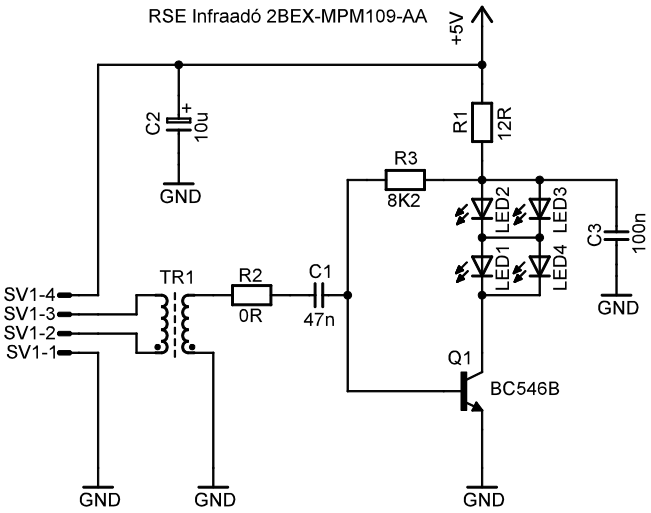
RSE Infraadó 2BEX-MPM109-AA
+5V
C2
10u
GND
R1
12R
R3
8K2
LED2
LED3
LED1
LED4
C3
100n
GND
TR1
R2
0R
C1
47n
SV1-4
SV1-3
SV1-2
SV1-1
Q1
BC546B
GND
GND
GND